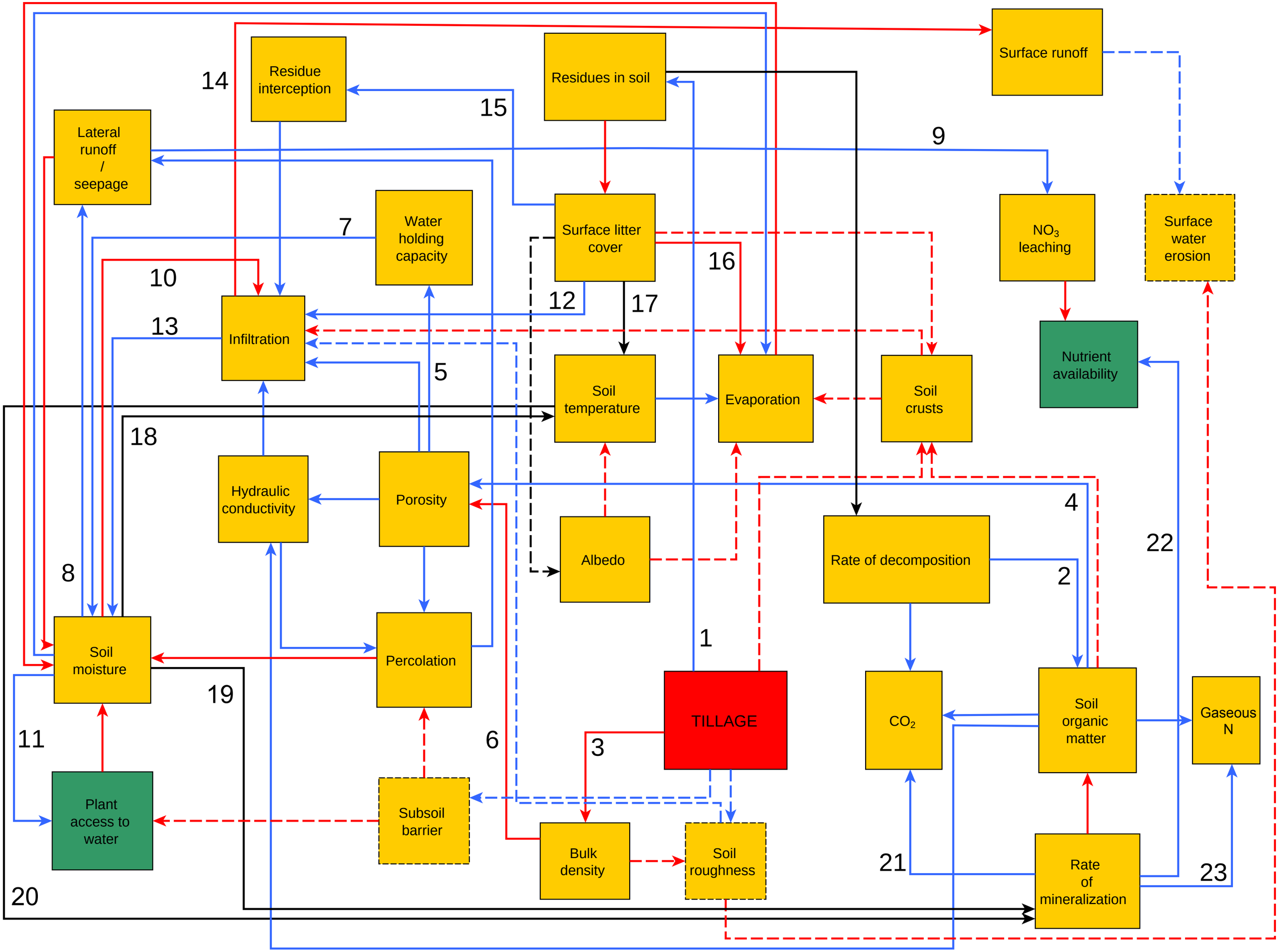
Surface runoff
Residue interception
Residues in soil
Lateral runoff / seepage
Water holding capacity
Surface litter cover
NO_3 leaching
Surface water erosion
Infiltration
Nutrient availability
Soil temperature
Evaporation
Soil crusts
Hydraulic conductivity
Porosity
Albedo
Rate of decomposition
Soil moisture
Percolation
TILLAGE
CO_2
Soil organic matter
Gaseous N
Plant access to water
Subsoil barrier
Bulk density
Soil roughness
Rate of mineralization
1
2
3
4
5
6
7
8
9
10
11
12
13
14
15
16
17
18
19
20
21
22
23